COPYRIGHT © 1998 ® THIRD ANGLE PROJECTION

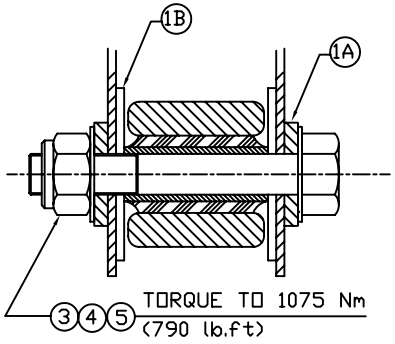

SECTION THROUGH PIVOT EYE BUSH

NOT TO SCALE

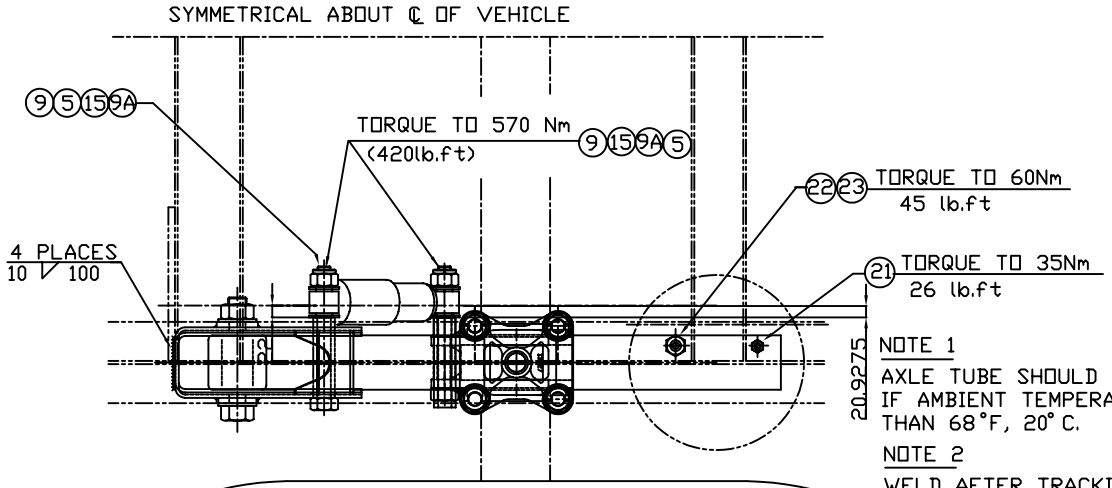

NOTE 1

AXLE TUBE SHOULD BE PRE-HEATED IF AMBIENT TEMPERATURE IS LESS THAN 68°F, 20°C.

NOTE 2

WELD AFTER TRACKING AXLE. PROTECT SPRING BEAM FROM ARCING AND SPLATTER.

NOTE 3

ALL BOLTS TO BE TORQUED WITH SUSPENSION IN THE RIDE HEIGHT POSITION

NOTE 4

AIR SPRING BOLTS DIRECT TO FLANGE. DRILL TO SUIT TOP PLATE

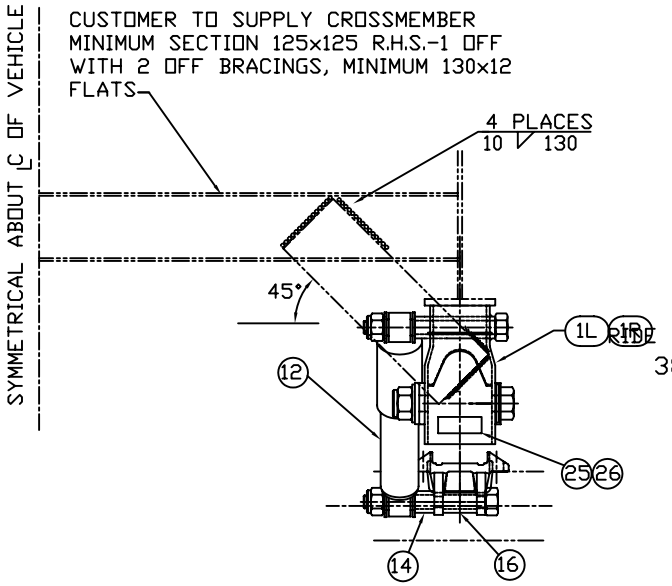

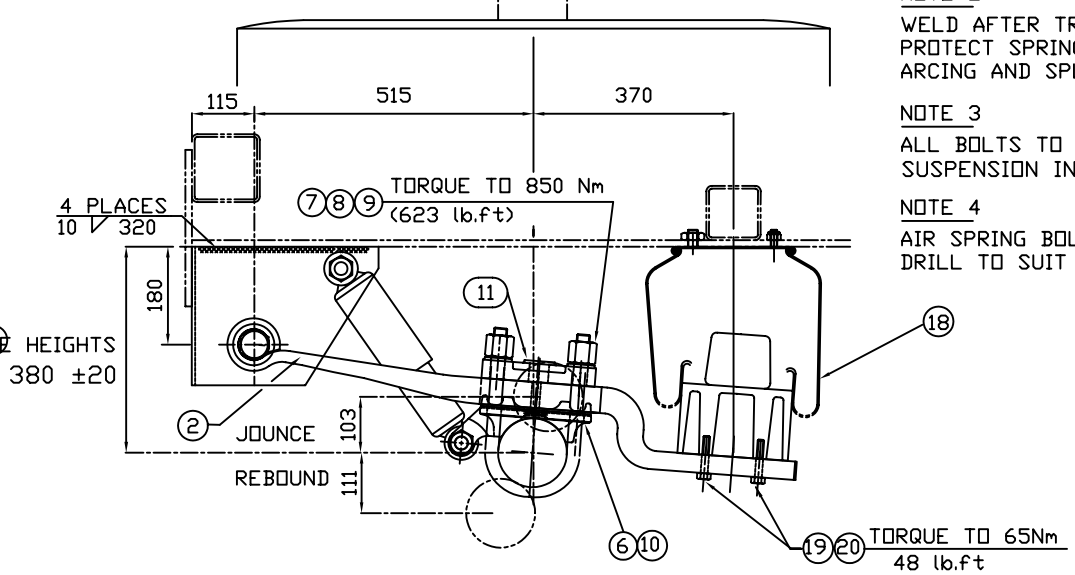

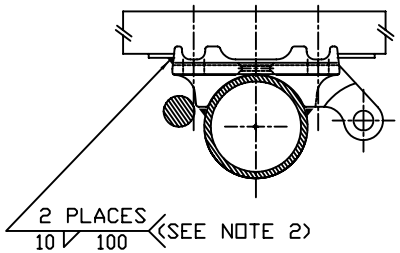

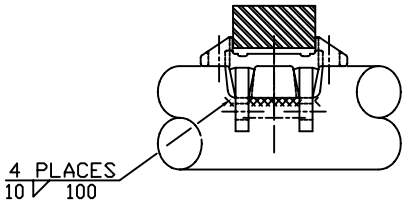

SADDLE WELDMENT

SUFF	CHANGE & REASON	DISP	ORIGINATOR	DATE
C	SHOCK TORQUE SETTINGS CHANGED	-	10/6/02 JH	10 JUN 2002
B	OPTIONAL LIFT ADDED	-	16/07/02 SC	16 JUL 2002
A	1ST ISSUE	-	ENG DS	7 DEC 1998

MODIFICATIONS

DISPOSITION: USE WITHOUT DISCREPANCY / REWORK STOCK / SCRAP STOCK

GRANNING LYNX

Granning UK Ltd.
Unit 37, Mallard Court, Hardwick Grange, Warrington, Cheshire. WA1 4RZ. England.

GRANNING UK LTD. CLAIMS PROPRIETARY RIGHTS TO ALL THE INFORMATION DISCLOSED ON THIS DRAWING. IT IS NOT TO BE REPRODUCED OR USED FOR MANUFACTURE OR FOR ANY OTHER PURPOSE OR DISCLOSED TO ANY THIRD PARTY WITHOUT OUR WRITTEN PERMISSION.

ITEM	PART NO.	QTY	DESCRIPTION	NOTES

BILL OF MATERIALS

MATERIAL: SEE BILL OF MATERIALS

FINISH: —

DO NOT SCALE IF IN DOUBT ASK

DESIGNED FOR CUSTOMER USE

ALL DIMENSIONS ARE IN MILLIMETRES

ORIGINAL FRAME SIZE 809mm x 562mm

COMPONENTS TO CARRY AT LOCATION (P)
PART NO. —
BATCH DATE —— (B)
SUPPLIER CODE —— (S)
BURRS AND SHARP EDGES TO BE REMOVED

UNSPECIFIED TOLERANCES
NO DECIMALS ± 1mm
ONE ± 0.5mm
TWO ± 0.2mm
ANGULAR ± 0°- 3'

DRAWN BY SCOTT
DATE 7 DEC 98
ALL ALTERATIONS TO BE VIA CAD
WEIGHT ESTIMATED ACTUAL —

AUTHORISED
CHECKED
SCALE 1:5
SUPERSEDES

TITLE
INSTALLATION
PTS 38 - 80L

DRAWING NO. 18176

SHEET 1 OF 1 A1

OPTIONAL L702PTSL BOLT ON TWIN LIFT ASSEMBLY

COPYRIGHT © 2002 ® THIRD ANGLE PROJECTION

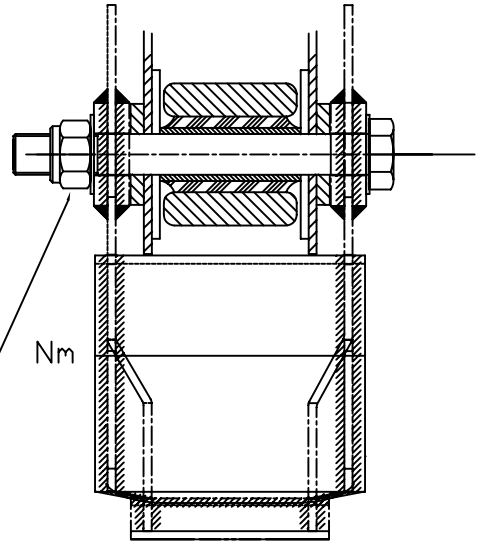

LIFT SPRING DETAIL
NOT TO SCALE

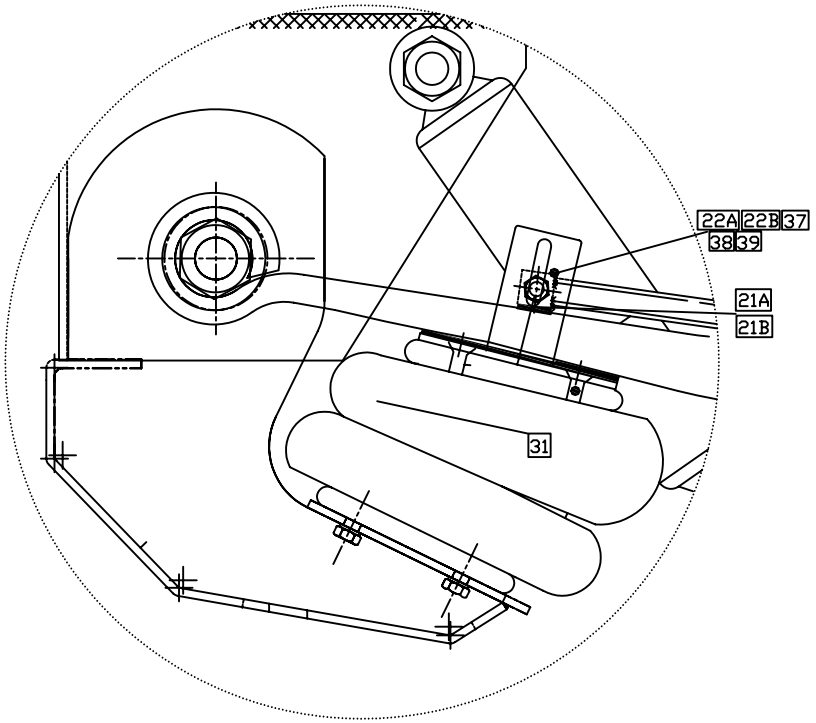

SECTION THROUGH PIVOT EYE BUSH
NOT TO SCALE

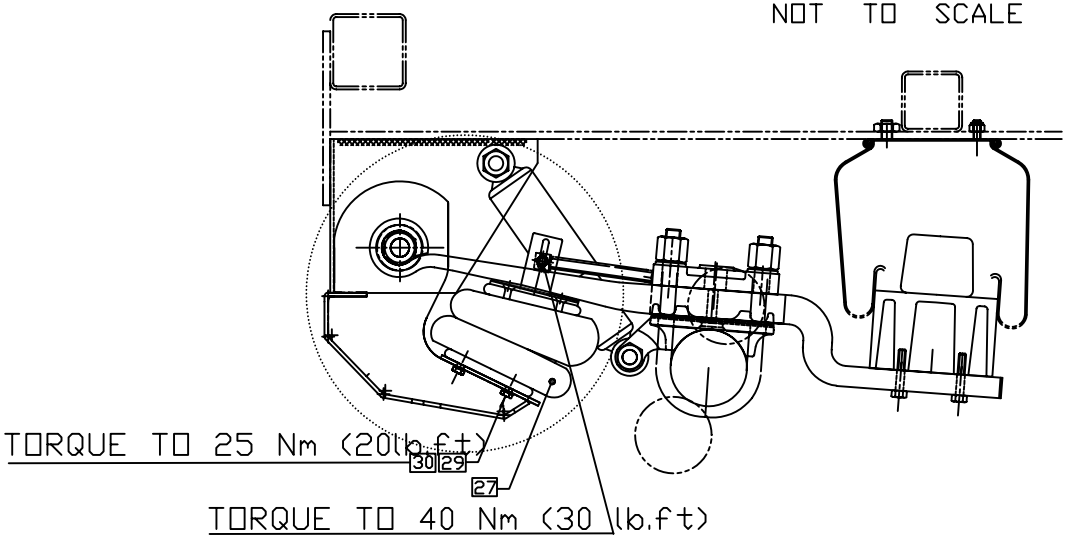

NOTE 1: PART NUMBER 23 REFER TO L702PTSL BOLT ON LIFT ASSEMBLY

NOTE 2: FIT ONE ASSEMBLY AS SHOWN TO EACH HANGER OF LIFTING AXLE

SUFF	CHANGE & REASON	DISP	ORIGINATOR	DATE
B	OPTIONAL LIFT ADDED	-	SC	19 APR 2002
A	1ST ISSUE	-	ENGDS	1998

DISPOSITION: USE WITHOUT CONSIDERANCE / REWORK STOCK / SCRAP STOCK

MODIFICATIONS

GRANNING LYNX
Granning UK Ltd.
Unit 37, Mallard Court, Hardwick Grange, Warrington, Cheshire. WA1 4RZ. England.

GRANNING UK LTD. CLAIMS PROPRIETARY RIGHTS TO ALL THE INFORMATION DISCLOSED ON THIS DRAWING. IT IS NOT TO BE REPRODUCED OR USED FOR MANUFACTURE OR FOR ANY OTHER PURPOSE OR DISCLOSED TO ANY THIRD PARTY WITHOUT OUR WRITTEN PERMISSION.

ITEM	PART NO.	QTY	DESCRIPTION	NOTES

BILL OF MATERIALS

MATERIAL: SEE BILL OF MATERIALS

FINISH: ——

DO NOT SCALE IF IN DOUBT ASK

DESIGNED FOR CUSTOMER USE

DRAWN BY CALLAN
DATE 19 APR 02
AUTHORISED
CHECKED
SCALE 1:4
SUPERSEDES

ALL ALTERATIONS TO BE VIA CAD

WEIGHT ESTIMATED ACTUAL ——

ALL DIMENSIONS ARE IN MILLIMETRES

ORIGINAL FRAME SIZE 809mm x 562mm

COMPONENTS TO CARRY PART NO. AT LOCATION (P), BATCH DATE (B), SUPPLIER CODE (S)
BURRS AND SHARP EDGES TO BE REMOVED

UNSPECIFIED TOLERANCES
NO DECIMALS ± 1mm
ONE ± 0.5mm
TWO ± 0.2mm
ANGULAR ± 0°- 3'

TITLE
INSTALLATION
PTS 38 - 80L

DRAWING NO. 18176

SHEET 2 OF 2 A1